RoHS

Single Port RJ45 Connector with No Magnetics

AR11NM-4722I

- **Industrial Operating Temp: -40°C to +85°C**
- **CAT 6A Compliant**

Electrical Specifications @ 25°C				
Voltage Rating (VAC)	Current Rating (Amp)	Contact Resistance (mΩ)	Insulation Resistance @ 500VDC (MΩ)	Dielectric Strength 60Hz / 60 Sec
125	1.5	50 Max	500 Min	1000VAC

All specifications subject to change without notice.

MECHANICAL

Dimensions: inch (mm)

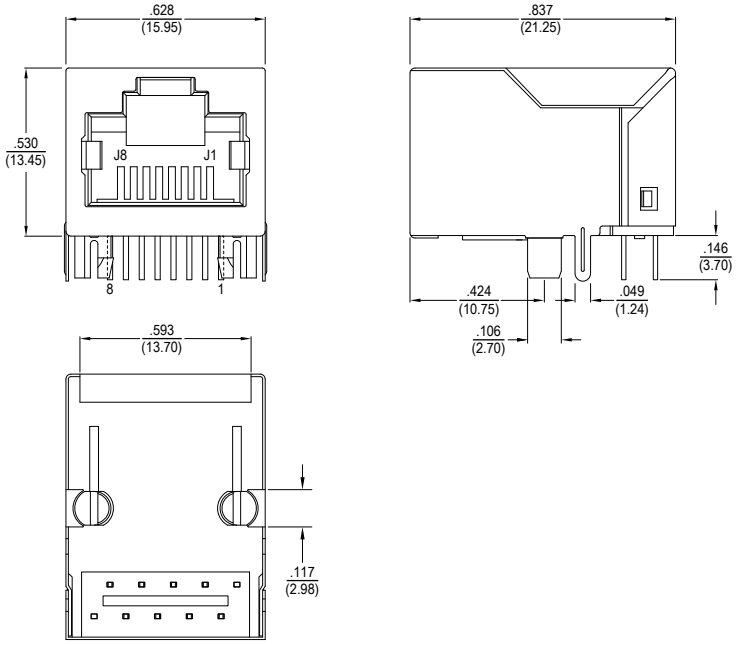

PCB LAYOUT

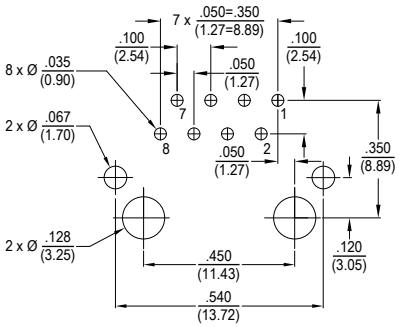

NOTES

Connector Materials:
Housing & Insert: PBT UL94V-0
Contact Material: Phosphor Bronze T=.35mm
Shield: 0.20-0.25mm Thickness Brass with Tin Plating
Contact Plating: Gold plating 6μ" in Contact Area